# Datasheet - BPS 303

Safety sensors / BNS 300 / Actuator

☒ Preferred typ

(Minor differences between the printed image and the original product may exist!)

• Suitable for food processing industry

## Ordering details

| | |
|---|---|
| Product type description | BPS 303 |
| Article number | 101117076 |
| EAN code | 4030661023878 |
| eCl@ss | 27-27-92-17 |

## Global Properties

| | |
|---|---|
| Product name | Magnet |
| Materials | |
| - Material of the housings | Plastic |
| Weight | 32 g |

## Dimensions

| | |
|---|---|
| Dimensions of the actuators | |
| - Width of the actuator | 15 mm |
| - Diameter of the actuator | 37 mm |

## Included in delivery

| | |
|---|---|
| tamperproof screws | 1 piece |

## Images

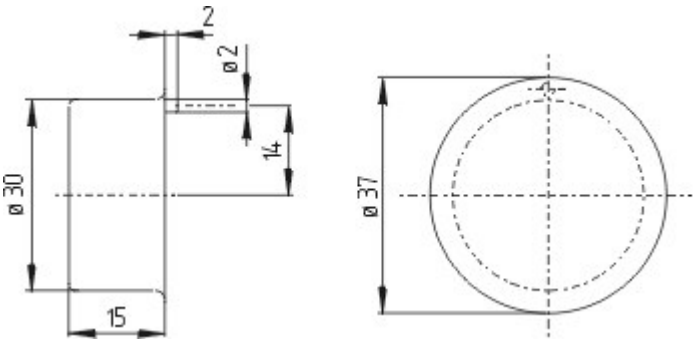

Dimensional drawing (miscellaneous)

K.A. Schmersal GmbH & Co. KG, Möddinghofe 30, D-42279 Wuppertal
The data and values have been checked throroughly. Technical modifications and errors excepted.
Generiert am 28.01.2016 - 02:08:18h Kasbase 3.2.1.F.64I